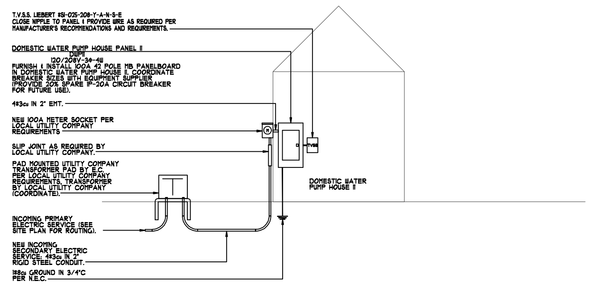

8 PUMP HOUSE II ELECTRICAL DISTRIBUTION RISER DIAGRAM

Scale:N.T.S.

NOTES:
1. SEE SYMBOLS, SCHEDULE, NOTES AND DETAILS.

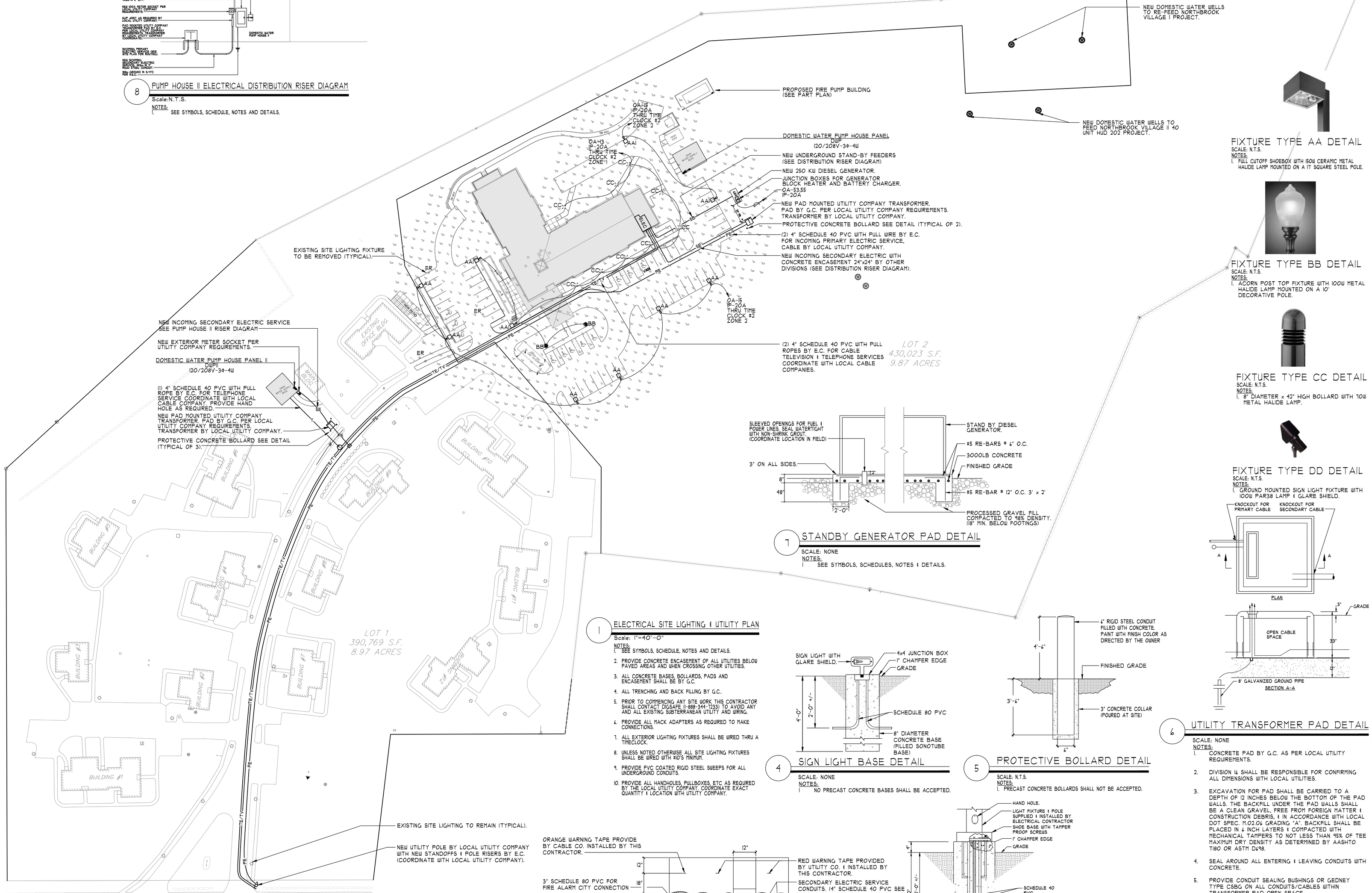

1 ELECTRICAL SITE LIGHTING & UTILITY PLAN

Scale: 1"=40'-0"

NOTES:
1. SEE SYMBOLS, SCHEDULE, NOTES AND DETAILS.
2. PROVIDE CONCRETE ENCASEMENT OF ALL UTILITIES BELOW PAVED AREAS AND WHEN CROSSING OTHER UTILITIES.
3. ALL CONCRETE BASES, BOLLARDS, PADS AND ENCASEMENT SHALL BE BY G.C.
4. ALL TRENCHING AND BACK FILLING BY G.C.
5. PRIOR TO COMMENCING ANY SITE WORK THIS CONTRACTOR SHALL CONTACT DIGSAFE (1-888-344-7233) TO AVOID ANY AND ALL EXISTING SUBTERRANEAN UTILITY AND WIRING.
6. PROVIDE ALL MACK ADAPTERS AS REQUIRED TO MAKE CONNECTIONS.
7. ALL EXTERIOR LIGHTING FIXTURES SHALL BE WIRED THRU A TIMECLOCK.
8. UNLESS NOTED OTHERWISE ALL SITE LIGHTING FIXTURES SHALL BE WIRED WITH #10'S MINIMUM.
9. PROVIDE PVC COATED RIGID STEEL SWEEPS FOR ALL UNDERGROUND CONDUITS.
10. PROVIDE ALL HANDHOLES, PULLBOXES, ETC AS REQUIRED BY THE LOCAL UTILITY COMPANY. COORDINATE EXACT QUANTITY & LOCATION WITH UTILITY COMPANY.

7 STANDBY GENERATOR PAD DETAIL

SCALE: NONE

NOTES:
1. SEE SYMBOLS, SCHEDULES, NOTES & DETAILS.

4 SIGN LIGHT BASE DETAIL

SCALE: NONE

NOTES:
1. NO PRECAST CONCRETE BASES SHALL BE ACCEPTED.

5 PROTECTIVE BOLLARD DETAIL

SCALE: N.T.S.

NOTES:
1. PRECAST CONCRETE BOLLARDS SHALL NOT BE ACCEPTED.

FIXTURE TYPE AA DETAIL

SCALE: N.T.S.

NOTES:
1. FULL CUTOFF SHOEBOX WITH 150W CERAMIC METAL HALIDE LAMP MOUNTED ON A 17' SQUARE STEEL POLE.

FIXTURE TYPE BB DETAIL

SCALE: N.T.S.

NOTES:
1. ACORN POST TOP FIXTURE WITH 100W METAL HALIDE LAMP MOUNTED ON A 10' DECORATIVE POLE.

FIXTURE TYPE CC DETAIL

SCALE: N.T.S.

NOTES:
1. 8" DIAMETER x 42" HIGH BOLLARD WITH 70W METAL HALIDE LAMP.

FIXTURE TYPE DD DETAIL

SCALE: N.T.S.

NOTES:
1. GROUND MOUNTED SIGN LIGHT FIXTURE WITH 100W PAR38 LAMP & GLARE SHIELD.

6 UTILITY TRANSFORMER PAD DETAIL

SCALE: NONE

NOTES:
1. CONCRETE PAD BY G.C. AS PER LOCAL UTILITY REQUIREMENTS.
2. DIVISION 16 SHALL BE RESPONSIBLE FOR CONFIRMING ALL DIMENSIONS WITH LOCAL UTILITIES.
3. EXCAVATION FOR PAD SHALL BE CARRIED TO A DEPTH OF 12 INCHES BELOW THE BOTTOM OF THE PAD WALLS. THE BACKFILL UNDER THE PAD WALLS SHALL BE A CLEAN GRAVEL, FREE FROM FOREIGN MATTER & CONSTRUCTION DEBRIS, & IN ACCORDANCE WITH LOCAL DOT SPEC. M.02.06 GRADING "A". BACKFILL SHALL BE PLACED IN 6 INCH LAYERS & COMPACTED WITH MECHANICAL TAMPERS TO NOT LESS THAN 95% OF THE MAXIMUM DRY DENSITY AS DETERMINED BY AASHTO T180 OR ASTM D698.
4. SEAL AROUND ALL ENTERING & LEAVING CONDUITS WITH CONCRETE.
5. PROVIDE CONDUIT SEALING BUSHINGS OR GEDNEY TYPE CSBG ON ALL CONDUITS/CABLES WITHIN TRANSFORMER PAD OPEN SPACE.

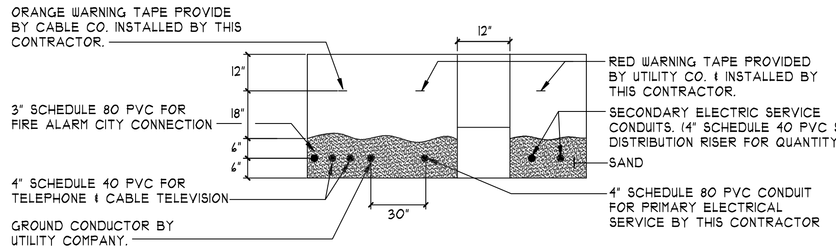

2 ELECTRICAL TRENCHING DETAIL

SCALE: N.T.S.

NOTES:
1. COORDINATE WITH LOCAL UTILITY COMPANIES.
2. COORDINATE CONCRETE ENCASEMENT REQUIREMENTS WITH G.C.,LOCAL UTILITY COMPANIES & THE AUTHORITY HAVING JURISDICTION.

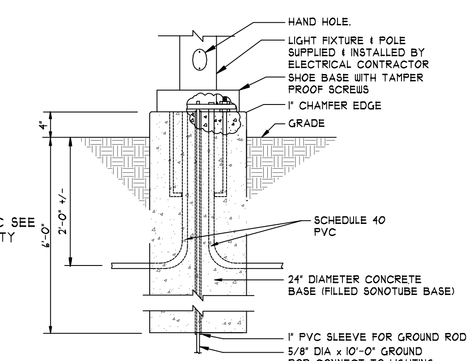

3 SITE LIGHT POLE BASE DETAIL

SCALE: NONE

NOTES:
1. NO PRECAST CONCRETE BASES SHALL BE ACCEPTED.

Date November 15, 2010
100% Construction Documents
Revision: October 26, 2011
Separated Fire Alarm & Emergency Lighting Plans

2010 COPYRIGHT NOTICE
THE SKETCHES, DRAWINGS AND PLANS ON THIS SHEET ARE LIMITED BY NATURE AND INTENDED ONLY FOR THE PURPOSE OF THE PROJECT DESIGNATED. ANY OTHER USE IS A VIOLATION OF THE LAW AND IS SUBJECT TO PROSECUTION. UNLESS WRITTEN PERMISSION IS OBTAINED BY STUDIO ONE INC. DRAWINGS, SPECIFICATIONS AND PROJECT MANUAL ARE THE PROPERTY OF STUDIO ONE INC. ALL RIGHTS RESERVED.

studio one. inc.
architects - planners
979 Main Street Springfield, MA
p. 413.733.7332
f. 413.737.1464
www.studiooneartchitects.com

NORTHBROOK VILLAGE II, HUD Section 202 Senior Housing HUD No. 023-EE232

Berlin, Massachusetts
Montachusett Home Care Corporation | Berlin Retirement Homes, Inc
Client Address

Stamp:

ELECTORAL SITE PLAN & DETAILS

Scale: AS NOTED
Drawn by P.P.
Checked by C.R.

E5.01

Project number 2010-1002
Set number:

WALTER McILVEEN ASSOCIATES, INC.
CONSULTING ENGINEERS
195 WEST MAIN STREET
AVON, CT 06001-0516
WMA Project # 55124

Copyright 2010 by:
WALTER McILVEEN ASSOCIATES, INC.
These documents have been prepared specifically for this project and are not intended for other use or reproduction of the Engineer, dated and in writing. Any modifications to these documents after release by the Engineer is without the approval of the engineer and will void and nullify all responsibility of the Engineer to the altered document.